MDL-XF-1035/2-3W

INFRARED DIODE LASER AT 1035nm

It features ultra compact design, long lifetime, cost-effectiveness and easy operation. They are widely used in measurement, communication, spectrum analysis, etc.

SPECIFICATIONS

Central wavelength (nm)	1035±20
Operating mode	CW
Output power (W)[1]	2-3
Power stability (rms, 4 hours ± 3°C)	<3%, <2%, <1%
Transverse mode	Multimode
Dimensions of beam at the aperture (mm)	~5×8
Beam divergence, full angle (mrad)	<3.0
Warm-up time (minutes)	<5
Cooled method	Air cooled
Beam height from base plate (mm)	37
Operating temperature (°C)	10-35
Power supply (100-240VAC)	PSU-H-FDA/PSU-H-LED
Modulation option	DC-1kHz, 1kHz-10kHz, 10kHz-30kHz optional; TTL and Analog optional
Expected lifetime (hours)	>10000

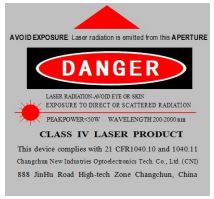

LASER HEAD	POWER SUPPLY (PSU-H-FDA)[2]	POWER SUPPLY (PSU-H-LED)[3]
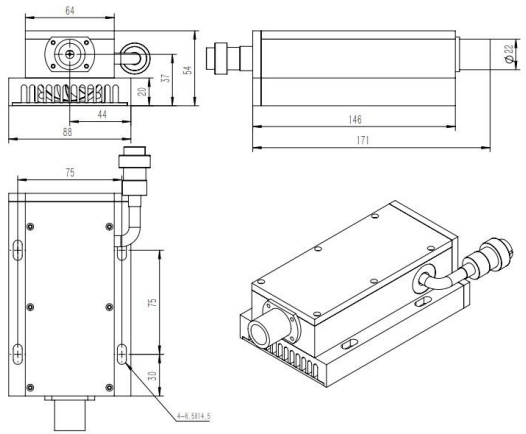	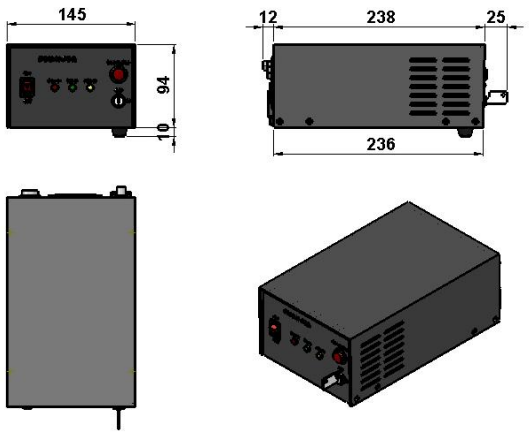	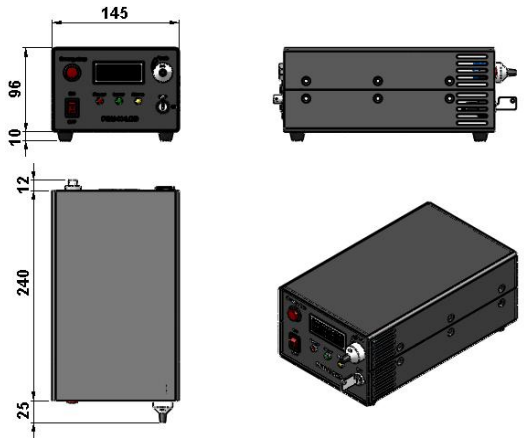
171 (L) ×88 (W) ×54 (H) mm³, 1.4kg	275 (L) ×145 (W) ×104 (H) mm³, 2.1kg	277 (L) ×145 (W) ×106 (H) mm³, 2.3kg

1 Any power level can be selected in this range.

2 Fixed output power; Modulation up to 30kHz.

3 Output power adjustable 10-100%; RS232 control optional; Modulation up to 30kHz.

Website: http://www.cnilaser.com E-mail: sales@cnilaser.com Tel: +86-431-85603799 Fax: +86-431-89216068