MGL-FN-552/1~300mW

LD PUMPED ALL-SOLID-STATE GREEN LASER

DPSS green laser at 552nm is made features of ultra compact, long lifetime and easy operating, which is used in measurement, medical treatment, scientific research, etc.

SPECIFICATIONS

Wavelength (nm)	552±1
Operating mode	CW
Output power (mW)	>10,50,100,.....300
Power stability (rms, over 4 hours)	<3%, <5%, <10%
Transverse mode	Near TEM_{00}
Beam divergence, full angle (mrad)	<2
Beam diameter at the aperture (mm)	~2
Beam height from base plate (mm)	27.4
Warm-up time (minutes)	<10
Operating temperature (℃)	10~35
Power supply (90-264VAC)	PSU-H-LED /PSU-SR
Expected lifetime (hours)	10000
Warranty period	1 year

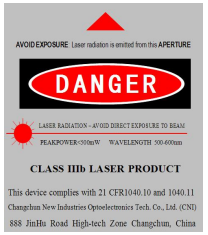

MGL-FN-552	PSU-H-LED	PSU-H-FDA	PSU-SR
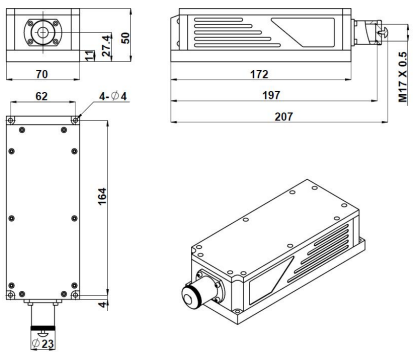		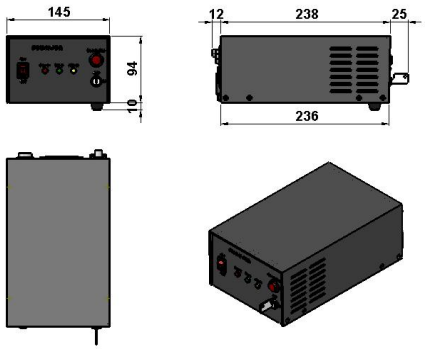	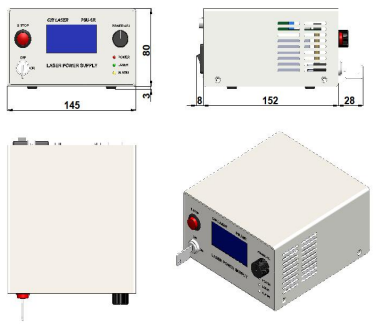
197(L)×70(W)×50(H) mm^3, 1.5kg	277 (L) ×145(W) ×106 (H) mm^3, 2.6 kg	275(L) ×145(W) ×104(H) mm^3, 2.3 kg	188(L) ×145(W) ×83(H) mm^3, 1.2kg

Website: http://www.cnilaser.com E-mail: sales@cnilaser.com Tel: +86-431-85603799 Fax: +86-431-87020258