MLL-FN-360 /1~50mW

LD PUMPED ALL-SOLID-STATE LOW NOISE UV LASER AT 360 nm

All solid state low noise UV laser at 360 nm is made features of TEM_{00}, long lifetime and easy operating, which is widely used in measurement, spectrum analysis as the substitute for He-Ne lasers.

SPECIFICATIONS

Wavelength (nm)	360±1
Operating mode	CW
Output power (mW)	>1, 10, 20, … , 50
Power stability (rms, over 4 hours)	<1%, <2%, <3%, <5%
Transverse mode	TEM_{00}
M^2 factor	<1.2
Noise of amplitude (rms, 20Hz~20MHz)	<1%, <0.5%
Beam diameter at the aperture ($1/e^2$, mm)	~1.5
Beam divergence, full angle (mrad)	<1.0
Polarization ratio	>50:1, >100:1, optional Horizontal±5 degree (Vertical Optional)
Warm-up time (minutes)	<10
Beam height from base plate (mm)	27.4
Operating temperature (℃)	10~35
Power supply (90-264VAC)	PSU-H-FDA
Expected lifetime (hours)	5000
Warranty	1 year

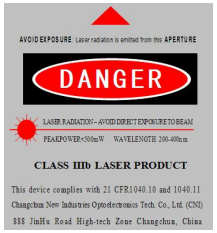

Note: The laser head needs to be used on a heat sink with good heat dissipation.

MLL-FN-360

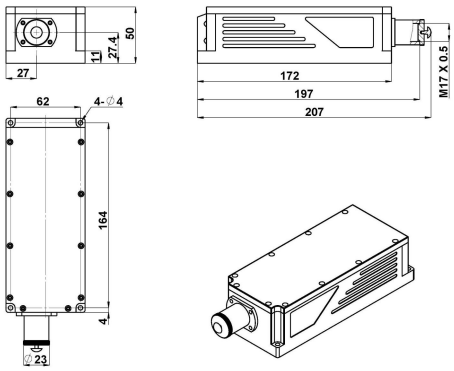

197(L)×70(W)×50(H) mm^3, 1.5 kg

PSU-H-FDA

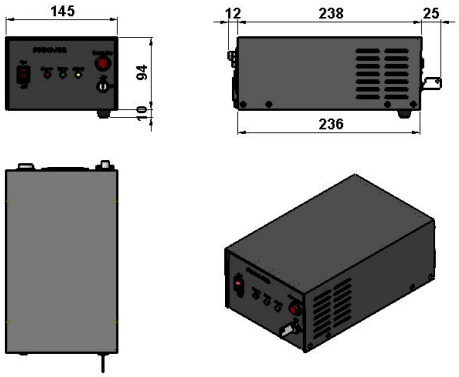

275(L) ×145(W) ×104(H) mm^3, 2.3 kg

Website: http://www.cnilaser.com E-mail: sales@cnilaser.com Tel: +86-431-85603799 Fax: +86-431-87020258