MPL-N-355/1~1000mW

LD PUMPED ALL-SOLID-STATE UV LASER

All solid state 355nm UV laser is made features of ultra compact, long lifetime, and easy operating, which is widely used in UV curing, micro-electronics, CD carving, laser medical treatment, scientific experiment, etc.

SPECIFICATIONS

Central wavelength (nm)		355±1
Output average power (mW)		1~1000
Operating mode		Frequency conversion of Q-switched pulsed laser
Average power (mW)		Average power (mW) = Single pulse energy (μJ) * Rep. rate (kHz)
Rep. rate (kHz)	EXT TRIG	1kHz-15kHz by external trigger with stable pulse energy, pulse duration and pulse period.
	QCW	QCW state with one rep. rate ~20kHz.
Single pulse energy (μJ)		1-50
Pulse duration (ns)		~5
Peak power (KW)		~10
Ave power stability		<3%, <5%
Transverse mode		Near TEM_{00}
Beam divergence, full angle (mrad)		<1.0
Beam diameter at the aperture ($1/e^2$, mm)		~3.0
Beam height from base plate (mm)		32
Warm-up time (minutes)		<10
Operating temperature (℃)		10~35
Power supply (100-240VAC)		PSU-N-LED
Cooling system		Air

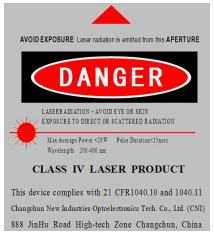

MPL-N-355	PSU-N-LED
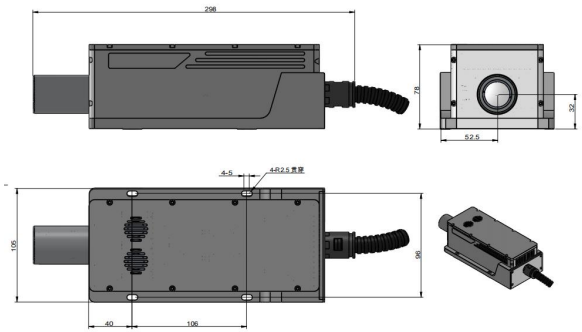	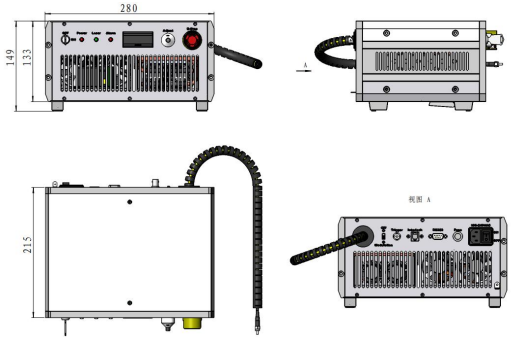
298 (L) ×105 (W) ×78 (H) mm³, 2.85 kg	**280 (L) ×215 (W) ×149 (H) mm³, 5.9 kg**

Website: http://www.cnilaser.com E-mail: sales@cnilaser.com Tel: +86-431-85603799 Fax: +86-431-87020258