OEM-SD-447/4000mW

OEM BLUE DIODE LASER AT 447NM

All solid state 447 nm blue laser is made features of ultra compact, long lifetime, low cost and easy operating. It's easy to be installed in customer's equipment.

SPECIFICATIONS

Wavelength (nm)	447±5	
Operating mode	CW	
Output power (mW)	>4000	
Power stability (rms, over 4 hours) at 25℃	<1%, <3%, <5%	
Beam diameter at the aperture (1/e^2,mm)	~2.7×2.7	
Beam divergence, half angle (mrad)	0.7×0.1	
Polarization direction	Horizontal+ Vertical	
Warm-up time (minutes)	<5	
Beam height from base plate (mm)	28.5(OEM-SD-447)	68.2(SD-447-HS)
Operating temperature (℃)	25+/-3(OEM-SD-447)	10-35 (SD-447-HS)
Expected lifetime (hours)	10000	
Power supply(90-264VAC or 12VDC&7A)	PSU-D-OEM	
Modulation option	TTL/Analog 1Hz-5KHz, 1Hz-10KHz, 1Hz-30KHz, and TTL on/off	
Expected lifetime (hours)	10000	
Warranty	1 year	

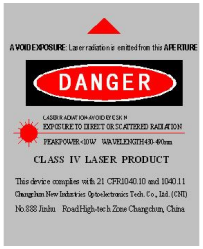

OEM-SD-447	SD-447-HS	PSU-D-OEM	Adapter
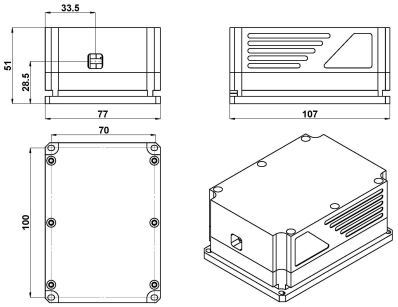	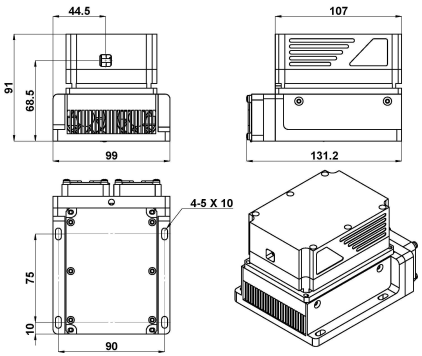	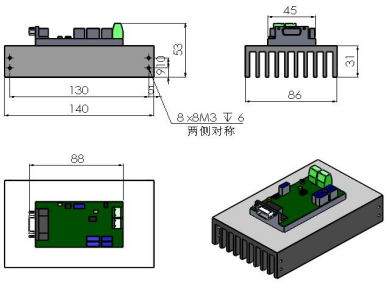	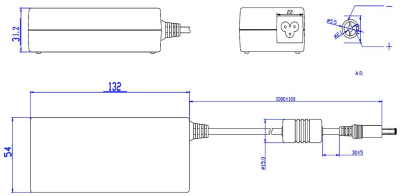
107(L)×77(W) ×49(H) mm^3, 0.9kg	134(L)×99(W) ×88.7(H) mm^3, 1.6kg	140(L)×86(W) ×53(H) mm^3, 0.40 kg	132(L)×54(W) ×31.2(H) mm^3, 0.20 kg

Website: http://www.cnilaser.com E-mail: sales@cnilaser.com Tel: +86-431-85603799 Fax: +86-431-87020258