Features

- Spectral detection range: 340~1100nm
- Capable of measuring beam quality of continuous wave (CW) and pulsed lasers
- Detection accuracy: <3%
- Simple operation, one-click rapid measurement

Category	Item	Details
General	Product Name	Automatic Beam Quality Analyzer
	Model	CN0310VIS-M2-B
	Detection Wavelength	340~1100nm
	M^2Range	1~50
	Laser Pulse Repetition Rate	20Hz~CW
	Minimum Input Beam Diameter	≥1.0mm@355nm, $1/e^2$ ≥1.2mm@532nm, $1/e^2$ ≥1.6mm@1064nm, $1/e^2$
	Maximum Input Beam Diameter	≤7.0mm@355nm, $1/e^2$ ≤10.0mm@532nm, $1/e^2$ ≤16.0mm@1064nm, $1/e^2$
	Detection Accuracy	<3%
	Laser Focal Position Accuracy	±10%
	Maximum Input Power	<1W
	Detection Mode	Automatic measurement after parameter initialization
	Typical Detection Time	≤60s (excluding initialization time)
	Weight	<15kg
	Dimensions	467.37*130*177.56(LWH, excluding feet)
	Operating Environment	Temperature 15~40℃, relative humidity <60%, clean environment
Sub-component Configuration & Specifications		
Sensor Module	Model	CN0310VIS-B
	Pixel Size	3.2μm
	Maximum Resolution	2448*2448
	Response Band	340~1100nm
	Effective Sensitive Area	7.8*7.8mm
	Bit Depth:	12-bit

	Spot Range	0.03~5mm（TEM00）
	Interface	USB3.0
Motion & Control Module	Travel	200mm，double optical path
	Repeat Positioning Accuracy	±5μm
	Controller	RS232 interface, dual-axis
	Type	5-phase stepper cross roller guide
	Power Supply	24V2A
Adjustable Attenuator	Maximum Input Beam Diameter	16.0mm@1/e^2
	Attenuation Value	OD0.5/OD1/OD1.5/OD2/OD3，automatic switching
Standard Lens	Focal Length Standard Lens	F200/F350/F500，maximum effective clear aperture <17mm
	Wavefront Distortion	＜λ/10@1064nm
Software	Operating Environment	Software: Windows 10/11 (64-bit), pre-installed WPS Office Hardware: RAM ≥8GB, CPU frequency ≥2.5GHz, cores ≥4; Intel i5 or equivalent recommended; optimal display resolution 1920*1080
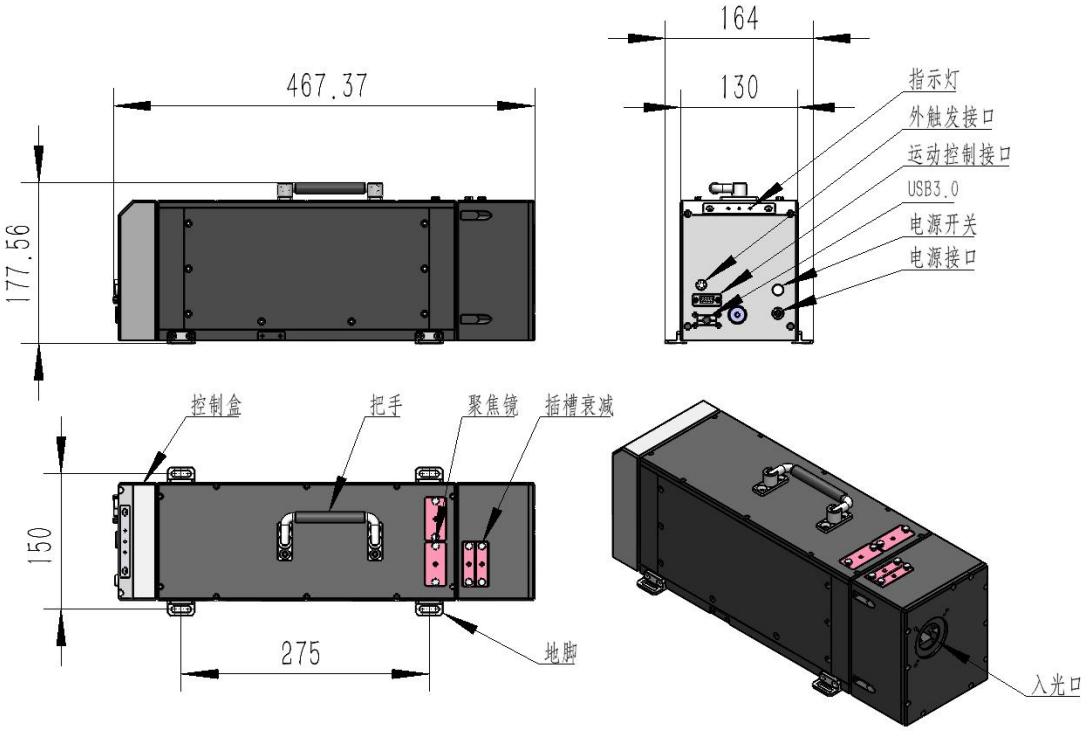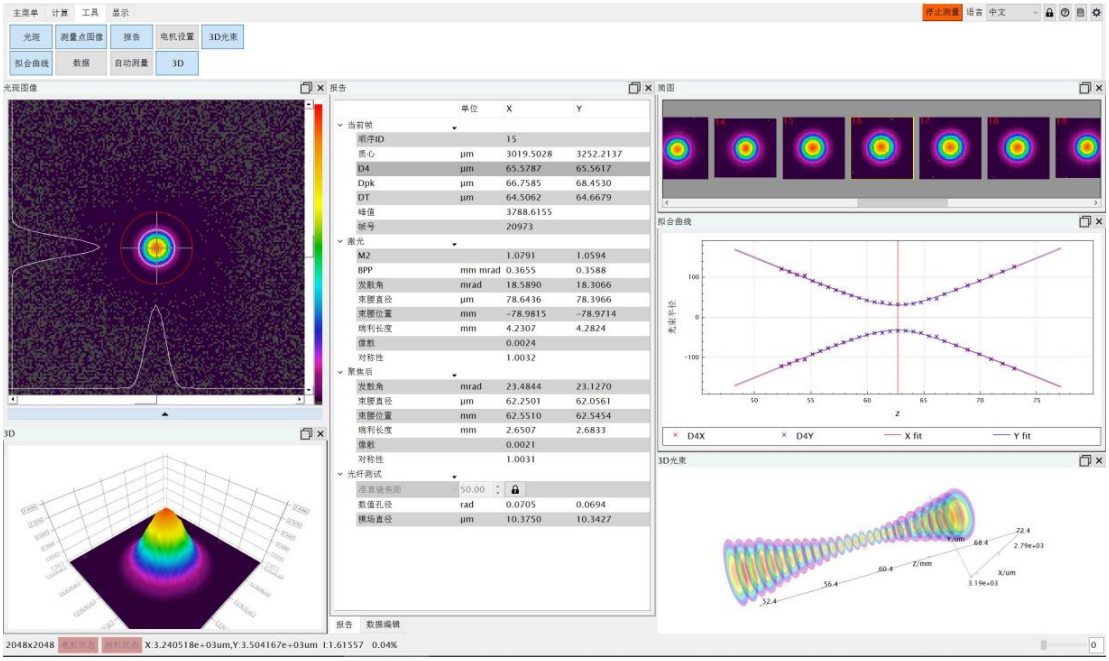
CN0310VIS-M2-B