F-447-HS/1-4000mW

BLUE DIODE LASER AT 447nm

It features TEM_{00} mode, ultra compact design, long lifetime, cost-effectiveness and easy operation. They are used in measurement, communication, spectrum analysis, etc

SPECIFICATIONS

Central wavelength (nm)	447±5	
Operating mode	CW	
Output power (mW)[1]	1-2000	2000-4000
Power stability (rms, 4 hours ± 3°C)	<2%, <1%, <0.5%	
Transverse mode	Multimode	
Beam diameter at the aperture ($1/e^2$, mm)	~2.7×2.7	~3.5×3.5
Beam divergence, full angle (mrad)	1.4×0.2	1.4×0.2
Warm-up time (minutes)	<5	
Beam height from base plate (mm)	25	
Operating temperature (°C)	25±3	
Power supply (100-240VAC)	PSU-III-FDA/PSU-III-LED/PSU-A-D	
Modulation option	DC-1kHz, 1kHz-10kHz, 10kHz-30kHz, 30kHz-100kHz optional; TTL and Analog optional	
Expected lifetime (hours)	>10000	

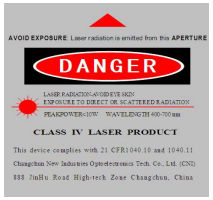

LASER HEAD[2]

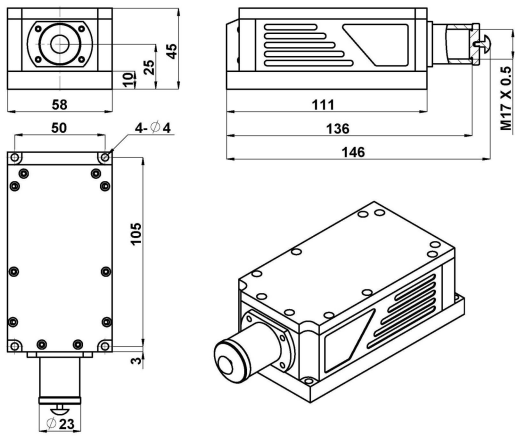

146 (L) ×58 (W) ×45 (H) mm³, 0.7kg

HEATSINK (TC-06) optional

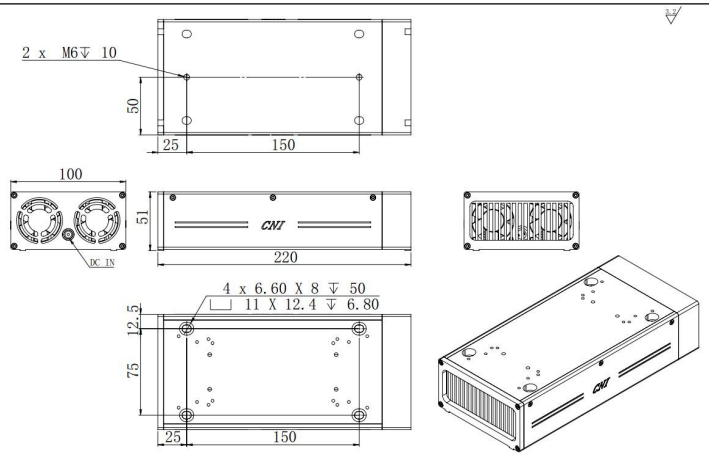

220 (L) ×100 (W) ×51 (H) mm³, 0.6kg

POWER SUPPLY (PSU-III-FDA)[3]	POWER SUPPLY (PSU-III-LED)[4]	POWER SUPPLY (PSU-A-D)[5]
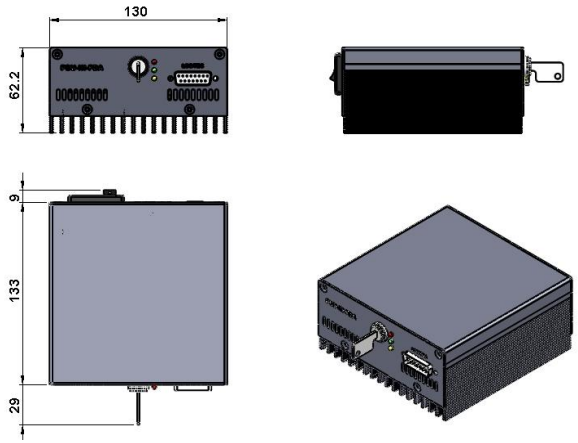	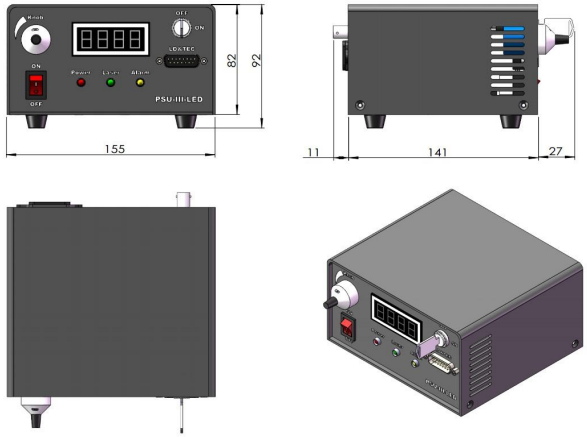	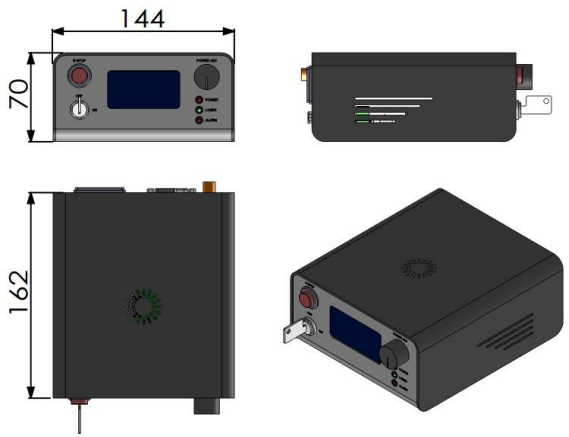
171 (L) ×130 (W) ×62.2 (H) mm³, 1.2kg	**179 (L) ×155 (W) ×92 (H) mm³, 1.5kg**	**162 (L) ×144 (W) ×70 (H) mm³, 1.0kg**

1 Any power level can be selected in this range.

2 The laser head needs to be used on a heat sink with good heat dissipation.

3 Fixed output power; Modulation up to 30kHz.

4 Output power adjustable 10-100%; RS232 control optional; Modulation up to 30kHz.

5 Output power adjustable 10-100%; RS232 control optional; Modulation up to 100kHz.