TEM-LN-1649DFB/1-5mW



LOW NOISE INFRARED DIODE LASER AT 1649nm

It features TEM_{00} mode, ultra compact design, long lifetime, cost-effectiveness and easy operation. They are used in measurement, communication, spectrum analysis, etc.

SPECIFICATIONS

Central wavelength (nm)	1649±2
Spectral line width (MHz)	~3
SMSR (dB)	35
Operating mode	CW
Output power (mW)[1]	1-5
Power stability (rms, 4 hours ± 3°C)	<2%, <1%, <0.5%
Transverse mode	TEM_{00}
Noise of amplitude (rms, 20Hz-20MHz)	<1%, <0.5%
Ellipticity	>0.95
M^2	<1.1
Beam diameter at the aperture ($1/e^2$, mm)	~1.0
Beam divergence, full angle (mrad)	<1.5
Warm-up time (minutes)	<5
Beam height from base plate (mm)	25
Operating temperature (°C)	25±3
Power supply (100-240VAC)	PSU-III-FDA/PSU-III-LED/PSU-A-D
Modulation option	DC-1kHz, 1kHz-10kHz, 10kHz-30kHz, 30kHz-100kHz optional; TTL and Analog optional
Expected lifetime (hours)	>10000





LASER HEAD[2]

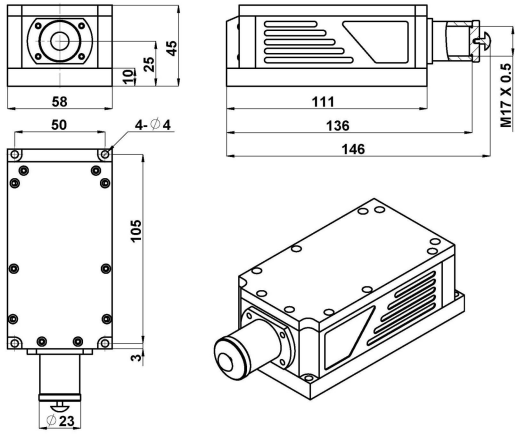

146 (L) ×58 (W) ×45 (H) mm³, 0.7kg

HEATSINK (TC-06) optional

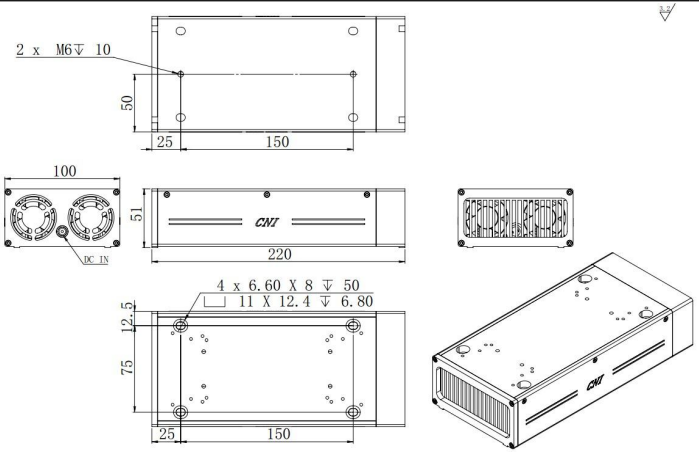

220 (L) ×100 (W) ×51 (H) mm³, 0.6kg

POWER SUPPLY (PSU-III-FDA)[3]	POWER SUPPLY (PSU-III-LED)[4]	POWER SUPPLY (PSU-A-D)[5]
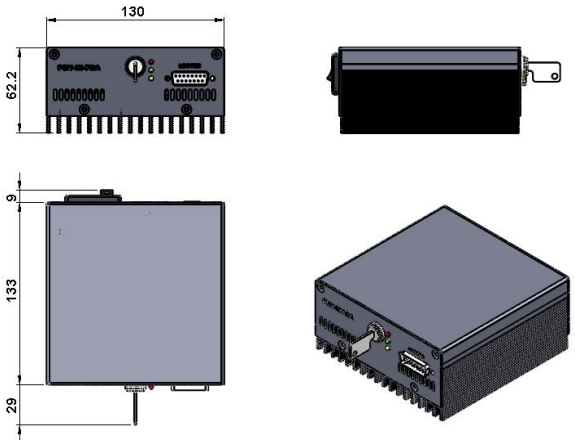	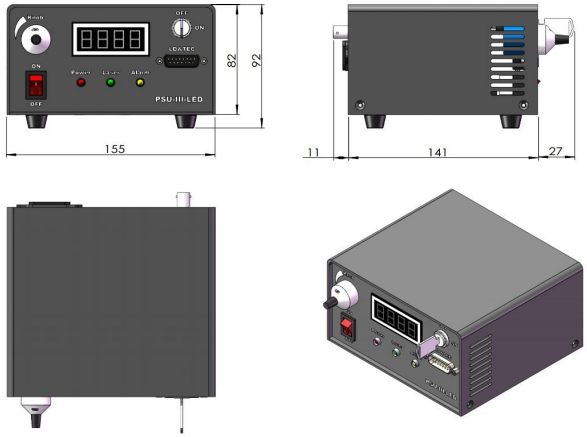	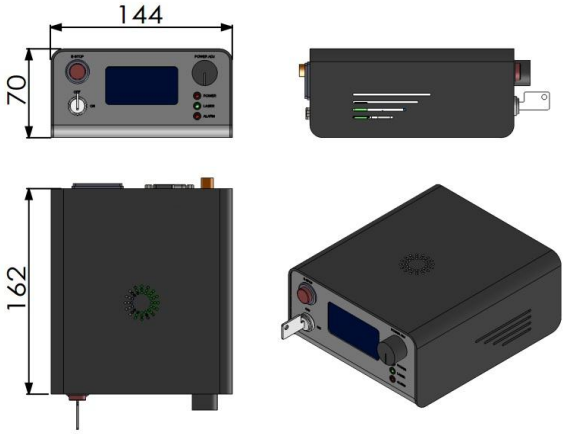
171 (L) ×130 (W) ×62.2 (H) mm³, 1.2kg	179 (L) ×155 (W) ×92 (H) mm³, 1.5kg	162 (L) ×144 (W) ×70 (H) mm³, 1.0kg

1 Any power level can be selected in this range.

2 The laser head needs to be used on a heat sink with good heat dissipation.

3 Fixed output power; Modulation up to 30kHz.

4 Output power adjustable 10-100%; RS232 control optional; Modulation up to 30kHz.

5 Output power adjustable 10-100%; RS232 control optional; Modulation up to 100kHz.