# TEM-LN-1653DFB/1-5mW



## LOW NOISE INFRARED DIODE LASER AT 1653nm

It features $TEM_{00}$ mode, ultra compact design, long lifetime, cost-effectiveness and easy operation. They are used in measurement, communication, spectrum analysis, etc.

**SPECIFICATIONS**

| | |
|---|---|
| Central wavelength (nm) | 1653±2 |
| Spectral line width (MHz) | ~3 |
| SMSR (dB) | 35 |
| Operating mode | CW |
| Output power (mW)[1] | 1-5 |
| Power stability (rms, 4 hours ± 3°C) | <2%, <1%, <0.5% |
| Transverse mode | $TEM_{00}$ |
| Noise of amplitude (rms, 20Hz-20MHz) | <1%, <0.5% |
| Ellipticity | >0.95 |
| $M^2$ | <1.1 |
| Beam diameter at the aperture ($1/e^2$, mm) | ~1.0 |
| Beam divergence, full angle (mrad) | <1.5 |
| Warm-up time (minutes) | <5 |
| Beam height from base plate (mm) | 25 |
| Operating temperature (°C) | 25±3 |
| Power supply (100-240VAC) | PSU-III-FDA/PSU-III-LED/PSU-A-D |
| Modulation option | DC-1kHz, 1kHz-10kHz, 10kHz-30kHz, 30kHz-100kHz optional; TTL and Analog optional |
| Expected lifetime (hours) | >10000 |






## LASER HEAD[2]

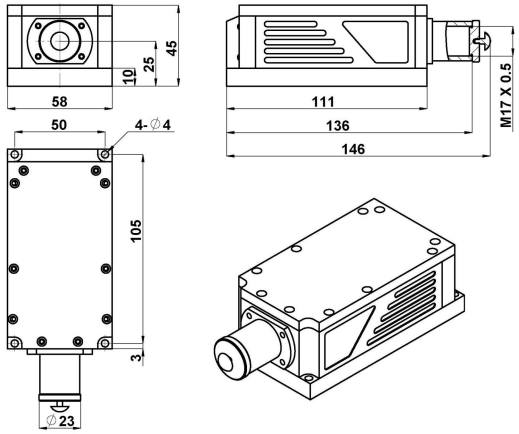


146 (L) ×58 (W) ×45 (H) mm³, 0.7kg

## HEATSINK (TC-06) optional

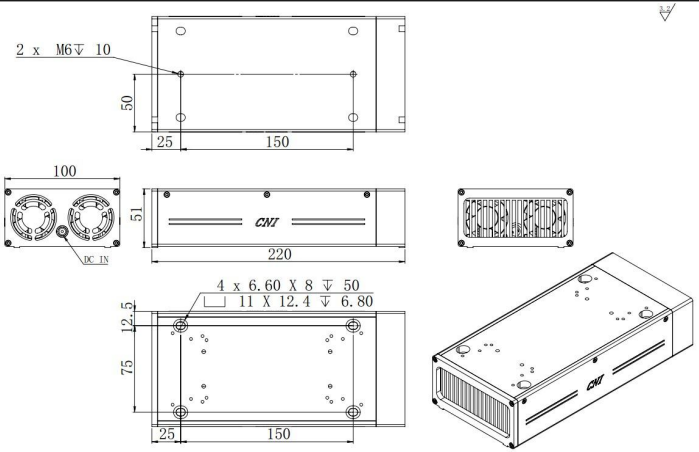


220 (L) ×100 (W) ×51 (H) mm³, 0.6kg

Website: http://www.cnilaser.com E-mail: sales@cnilaser.com Tel: +86-431-85603799 Fax: +86-431-89216068

| POWER SUPPLY (PSU-III-FDA)[3] | POWER SUPPLY (PSU-III-LED)[4] | POWER SUPPLY (PSU-A-D)[5] |
|---|---|---|
| 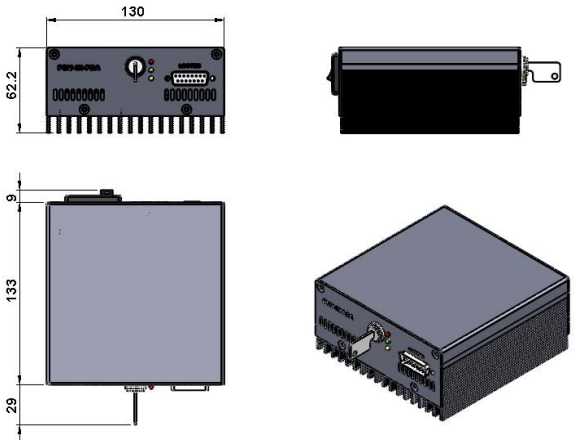 | 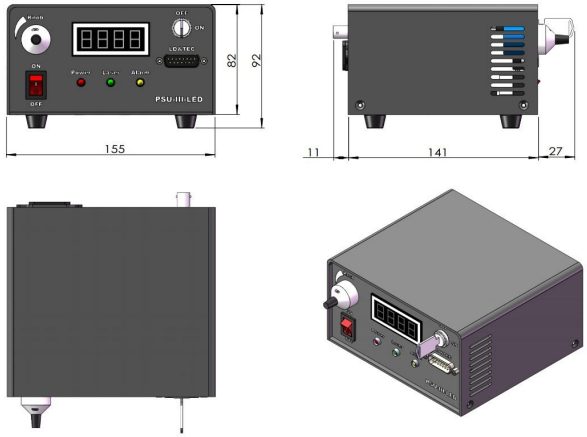 | 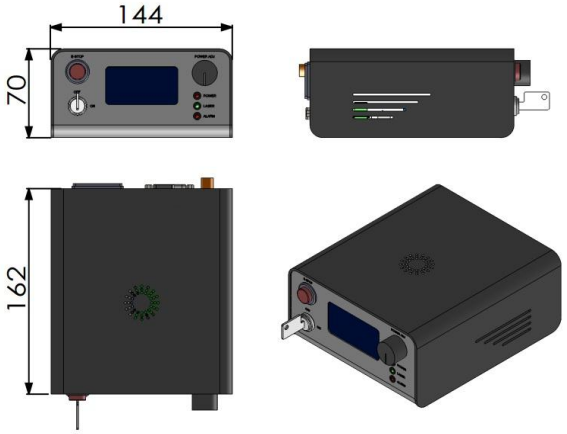 |
| 171 (L) ×130 (W) ×62.2 (H) mm³, 1.2kg | 179 (L) ×155 (W) ×92 (H) mm³, 1.5kg | 162 (L) ×144 (W) ×70 (H) mm³, 1.0kg |

1 Any power level can be selected in this range.

2 The laser head needs to be used on a heat sink with good heat dissipation.

3 Fixed output power; Modulation up to 30kHz.

4 Output power adjustable 10-100%; RS232 control optional; Modulation up to 30kHz.

5 Output power adjustable 10-100%; RS232 control optional; Modulation up to 100kHz.